1737‘ Victory‘s Bronze 12-Pounder cast in 1734 by Andrew Schalch

Parts of the gun -Namings 1-

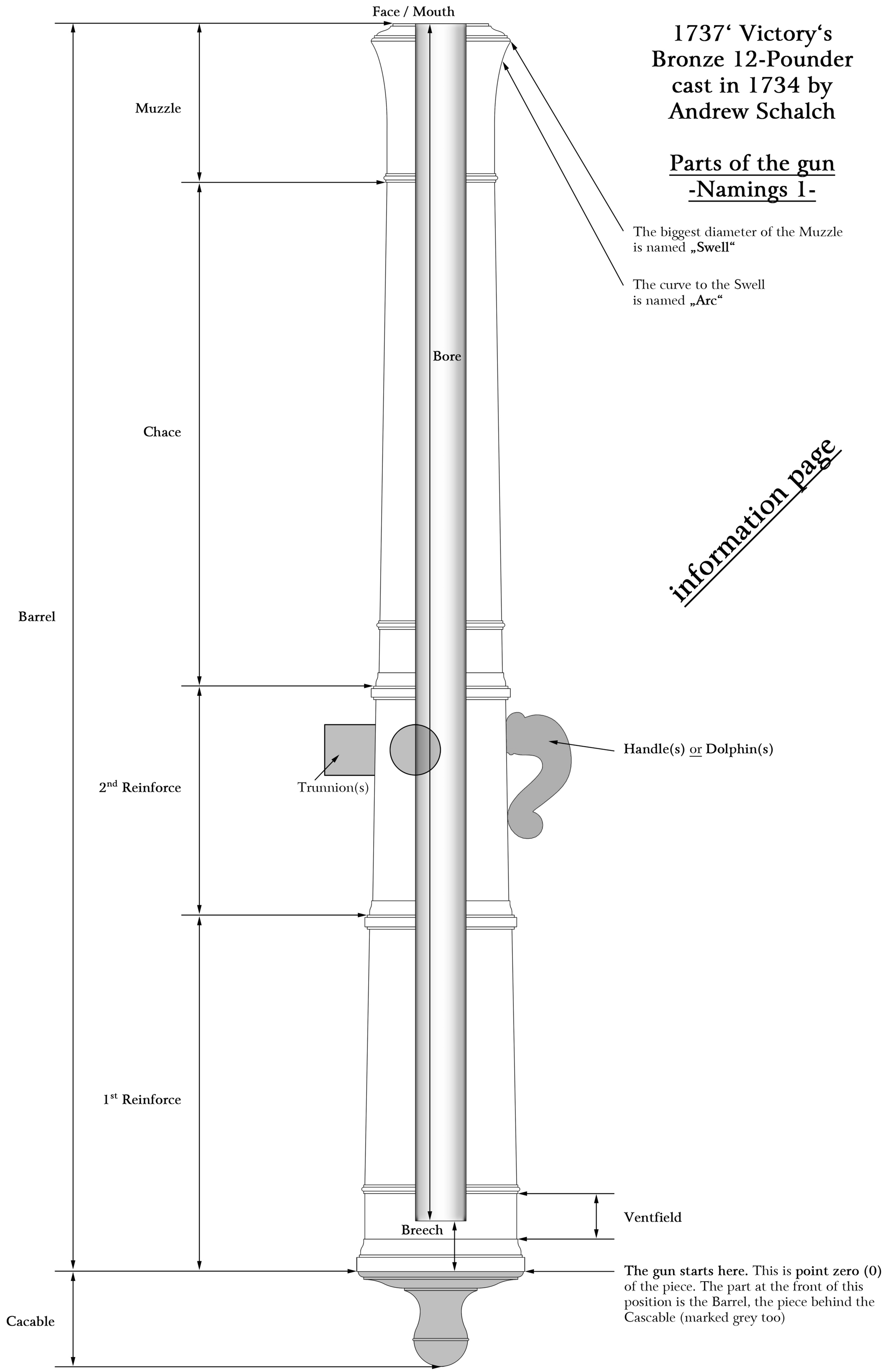

The biggest diameter of the Muzzle is named **„Swell“**

The curve to the Swell is named **„Arc“**

information page

The gun starts here. This is **point zero (0)** of the piece. The part at the front of this position is the Barrel, the piece behind the Cascable (marked grey too)

© Roman Domel
roman.domel@mail.de
Scientific elaboration by Roman Domel (Registered Support Accociation Moated Castle Oberau),
with the support of Mr. Charles Trollope, Mr. Nico Brinck, Mr. Dr. Heiko Berger (Military History Museum of the Bundeswehr Dresden)

1737‘ Victory‘s Bronze 12-Pounder cast in 1734 by Andrew Schalch

Parts of the gun -Namings 2-

information page

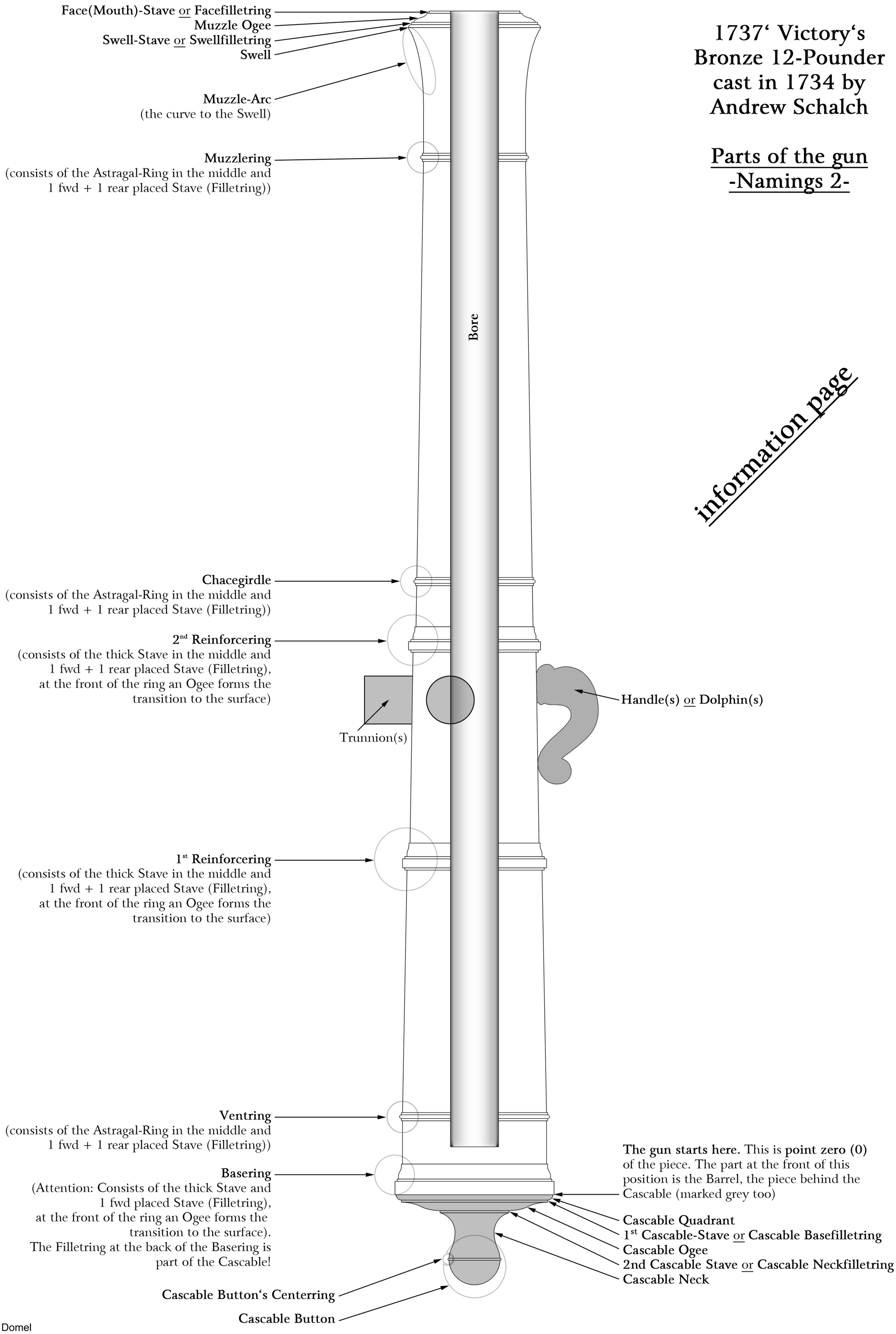

© Roman Domel
roman.domel@mail.de
Scientific elaboration by Roman Domel (Registered Support Accociation Moated Castle Oberau),
with the support of Mr. Charles Trollope, Mr. Nico Brinck, Mr. Dr. Heiko Berger (Military History Museum of the Bundeswehr Dresden)

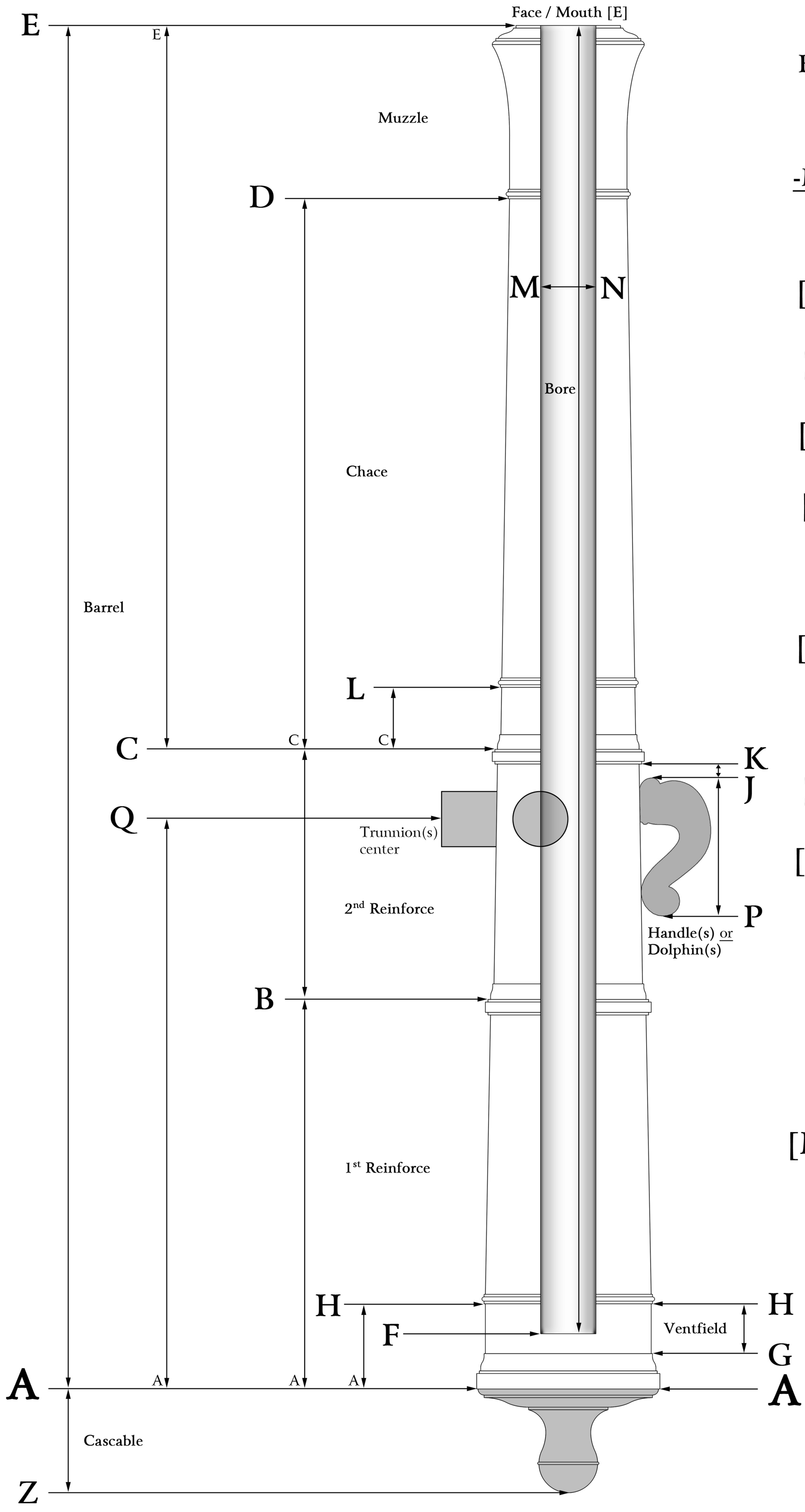

1737‘ Victory‘s
Bronze 12-Pounder
cast in 1734 by
Andrew Schalch

-Main Values in cm-
-lengths-
example: 17,8cm

[A→H]= _____

[A→B]= _____

[A→Q]= _____

[B→C]= _____

[C→L]= _____

[C→D]= _____

[C→E]= _____

[A→Z]= _____

[G→H]= _____

[J→K]= _____

[P→J]= _____

[F→E]= _____

[M→N]= _____

[A→E]= _____

_____

_____

_____

_____

© Roman Domel
roman.domel@mail.de
Scientific elaboration by Roman Domel (Registered Support Accociation Moated Castle Oberau),
with the support of Mr. Charles Trollope, Mr. Nico Brinck, Mr. Dr. Heiko Berger (Military History Museum of the Bundeswehr Dresden)

-lengths-
Basering with its Ogee [A→BR3] & Cascable [A→Z]

1737‘ Victory‘s
Bronze 12-Pounder
cast in 1734 by
Andrew Schalch

-Detail Values in cm-
-lengths-
example: 17,8cm

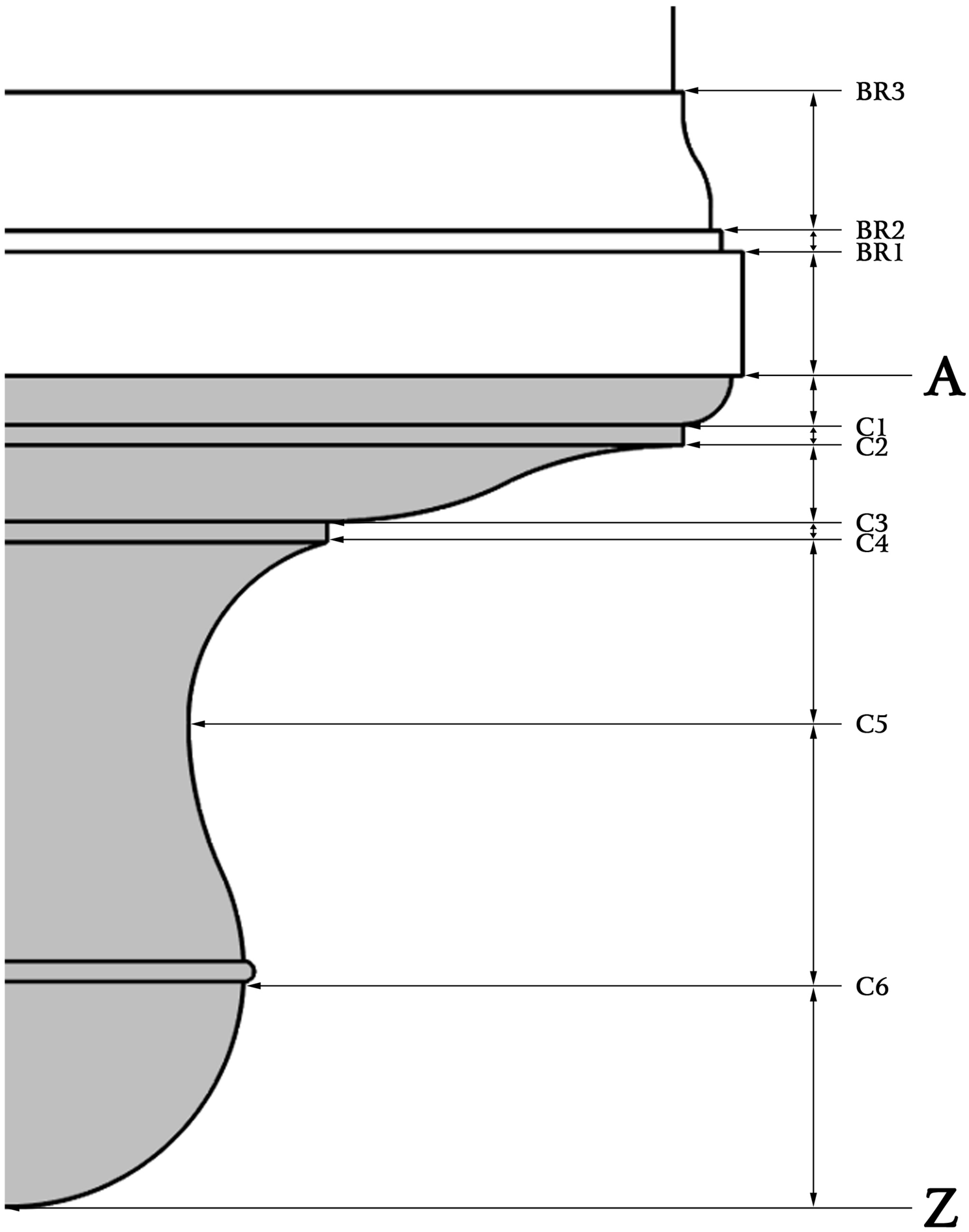

[A→BR1]= _____

[BR1→BR2]= _____

[BR2→BR3]= _____

[A→C1]= _____

[C1→C2]= _____

[C2→C3]= _____

[C3→C4]= _____

[C4→C5]= _____

[C5→C6]= _____

[C6→Z]= _____

_____

_____

_____

_____

_____

_____

_____

© Roman Domel
roman.domel@mail.de
Scientific elaboration by Roman Domel (Registered Support Accociation Moated Castle Oberau),
with the support of Mr. Charles Trollope, Mr. Nico Brinck, Mr. Dr. Heiko Berger (Military History Museum of the Bundeswehr Dresden)

-diameters-
Basering with its Ogee [A→br4]
& Cascable [A→Z]
& Ventfield [vf1]

1737‘ Victory‘s
Bronze 12-Pounder
cast in 1734 by
Andrew Schalch

-Detail Values in cm-
-diameters-
example: 17,8cm

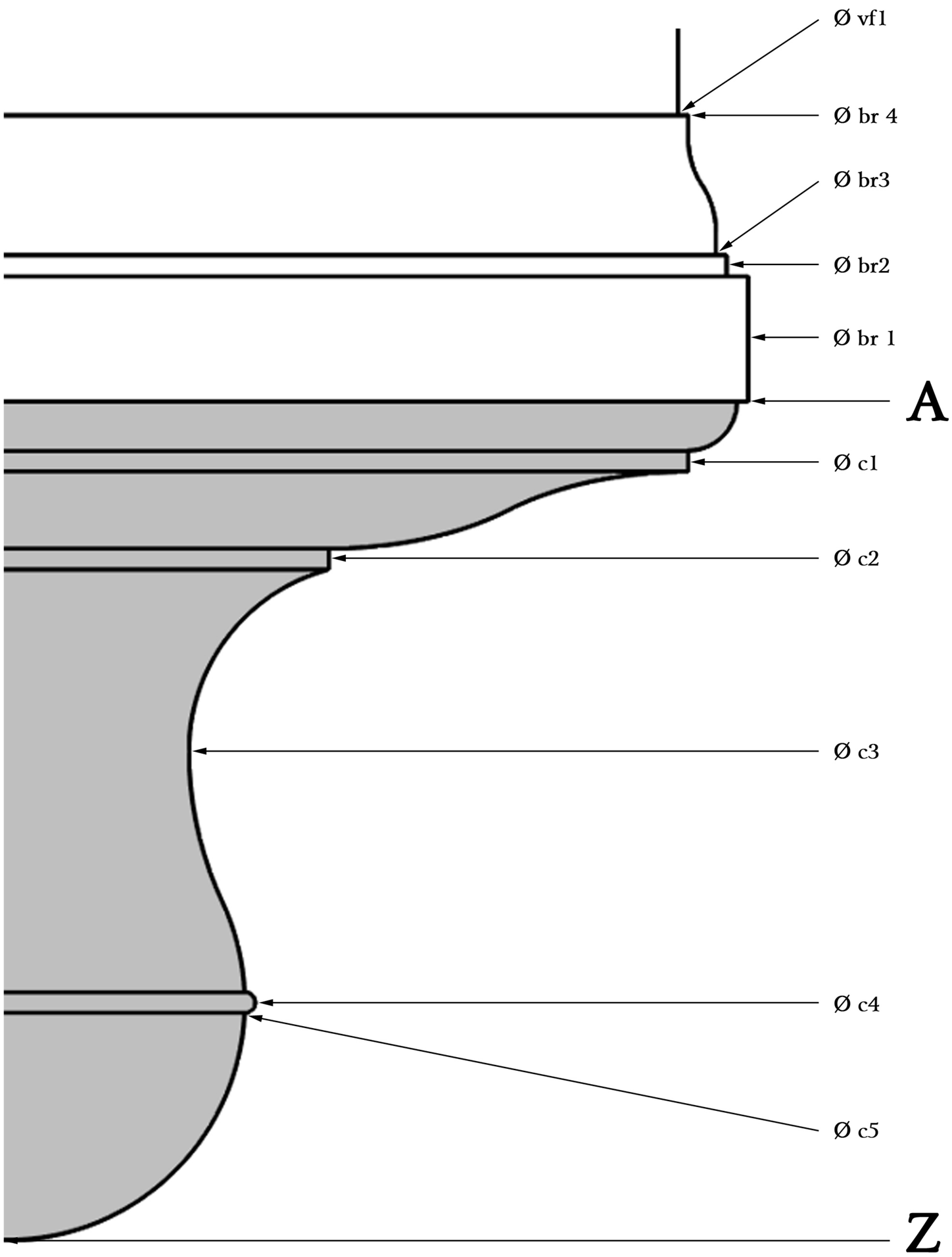

[Ø br1]= _____

[Ø br2]= _____

[Ø br3]= _____

[Ø br4]= _____

[Ø vf1]= _____

[Ø c1]= _____

[Ø c2]= _____

[Ø c3]= _____

[Ø c4]= _____

[Ø c5]= _____

© Roman Domel
roman.domel@mail.de
Scientific elaboration by Roman Domel (Registered Support Accociation Moated Castle Oberau),
with the support of Mr. Charles Trollope, Mr. Nico Brinck, Mr. Dr. Heiko Berger (Military History Museum of the Bundeswehr Dresden)

-lengths & diameters-
Muzzle

1737‘ Victory‘s
Bronze 12-Pounder
cast in 1734 by
Andrew Schalch

-Detail Values in cm-
-lengths & diameters-
example: 17,8cm

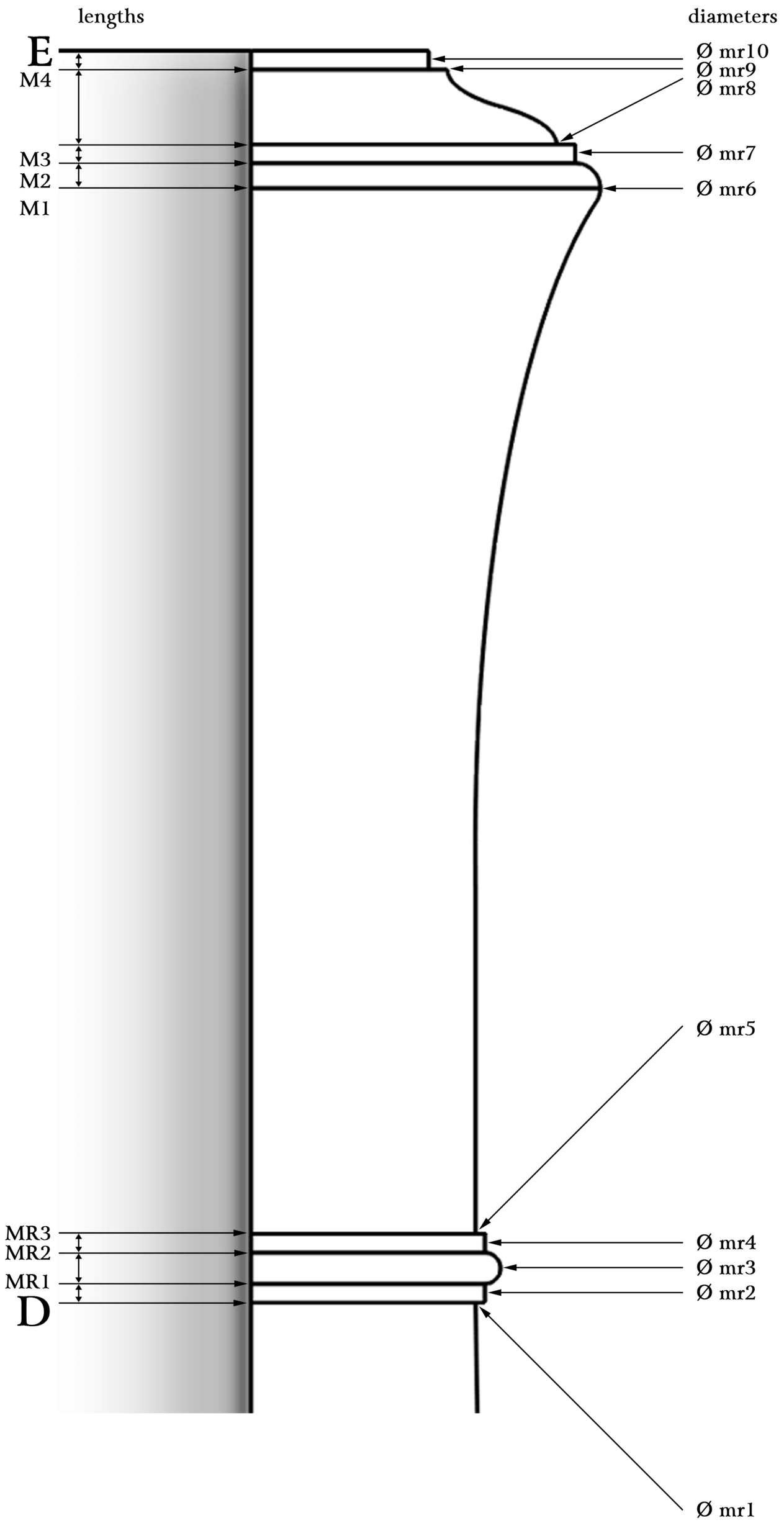

[D→MR1]= _____

[MR1→MR2]= _____

[MR2→MR3]= _____

[M1→M2]= _____

[M2→M3]= _____

[M3→M4]= _____

[M4→E]= _____

[Ø mr1]= _____

[Ø mr2]= _____

[Ø mr3]= _____

[Ø mr4]= _____

[Ø mr5]= _____

[Ø mr6]= _____

[Ø mr7]= _____

[Ø mr8]= _____

[Ø mr9]= _____

[Ø mr10]= _____

© Roman Domel
roman.domel@mail.de
Scientific elaboration by Roman Domel (Registered Support Accociation Moated Castle Oberau),
with the support of Mr. Charles Trollope, Mr. Nico Brinck, Mr. Dr. Heiko Berger (Military History Museum of the Bundeswehr Dresden)

-lengths-

1737‘ Victory‘s
Bronze 12-Pounder
cast in 1734 by
Andrew Schalch

-Detail Values in cm-
-lengths-
example: 17,8cm

2nd Reinforcering & Chacegridle

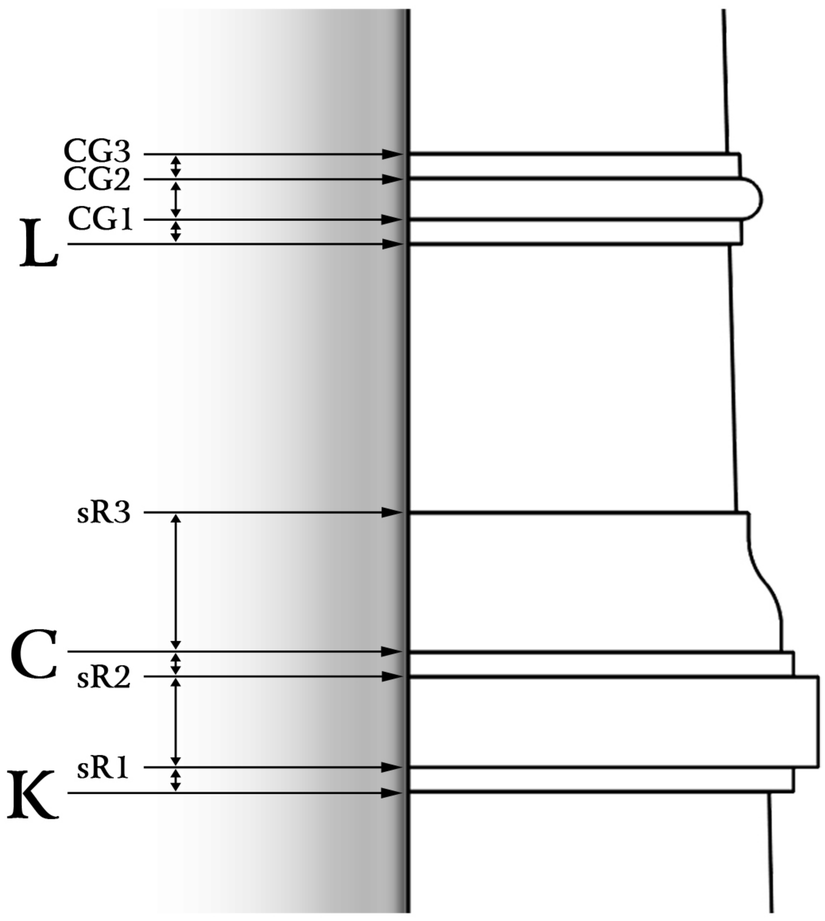

[L→CG1]= _____

[CG1→CG2]= _____

[CG2→CG3]= _____

_____

[K→sR1]= _____

[sR1→sR2]= _____

[sR2→C]= _____

[C→sR3]= _____

_____

1st Reinforcering

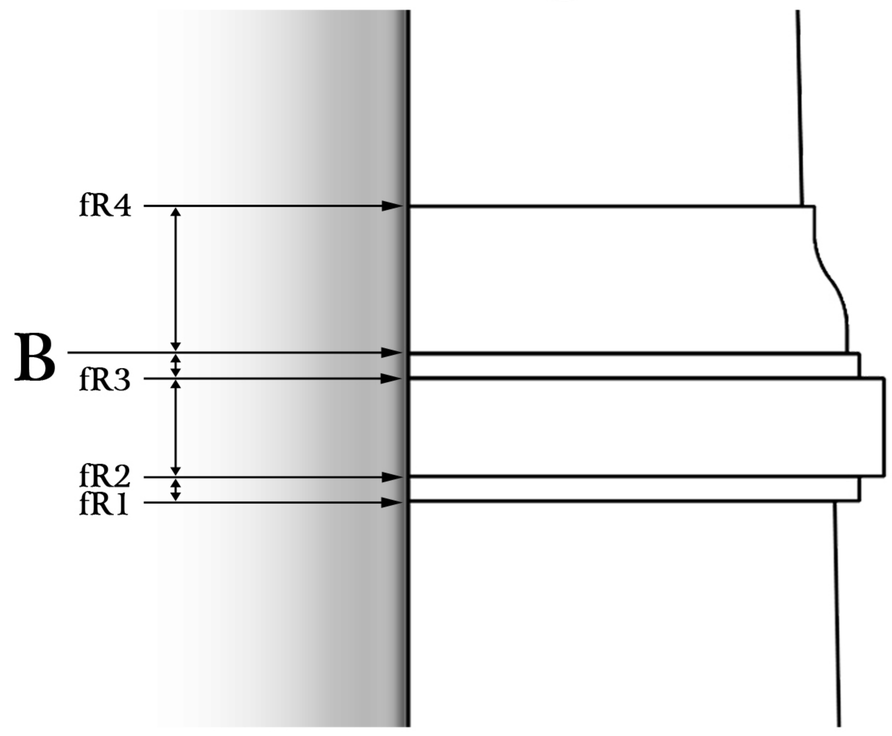

[fR1→fR2]= _____

[fR2→fR3]= _____

[fR3→B]= _____

[B→fR4]= _____

_____

Ventring

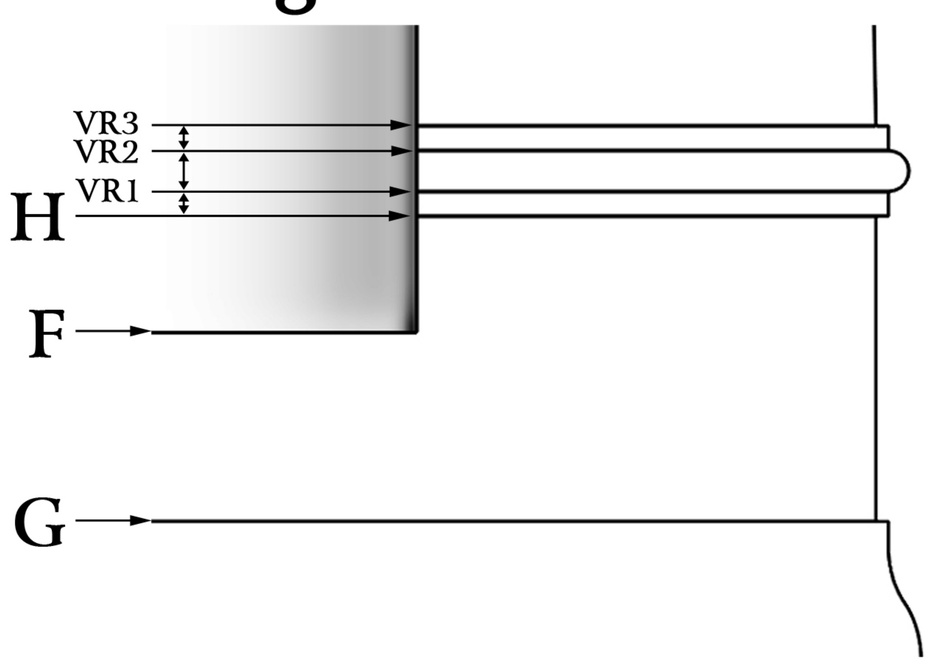

[H→VR1]= _____

[VR1→VR2]= _____

[VR2→VR3]= _____

_____

© Roman Domel
roman.domel@mail.de
Scientific elaboration by Roman Domel (Registered Support Accociation Moated Castle Oberau),
with the support of Mr. Charles Trollope, Mr. Nico Brinck, Mr. Dr. Heiko Berger (Military History Museum of the Bundeswehr Dresden)

-diameters-

1737‘ Victory‘s
Bronze 12-Pounder
cast in 1734 by
Andrew Schalch

-Detail Values in cm-
-diameters-
example: 17,8cm

2nd Reinforcering & Chacegridle

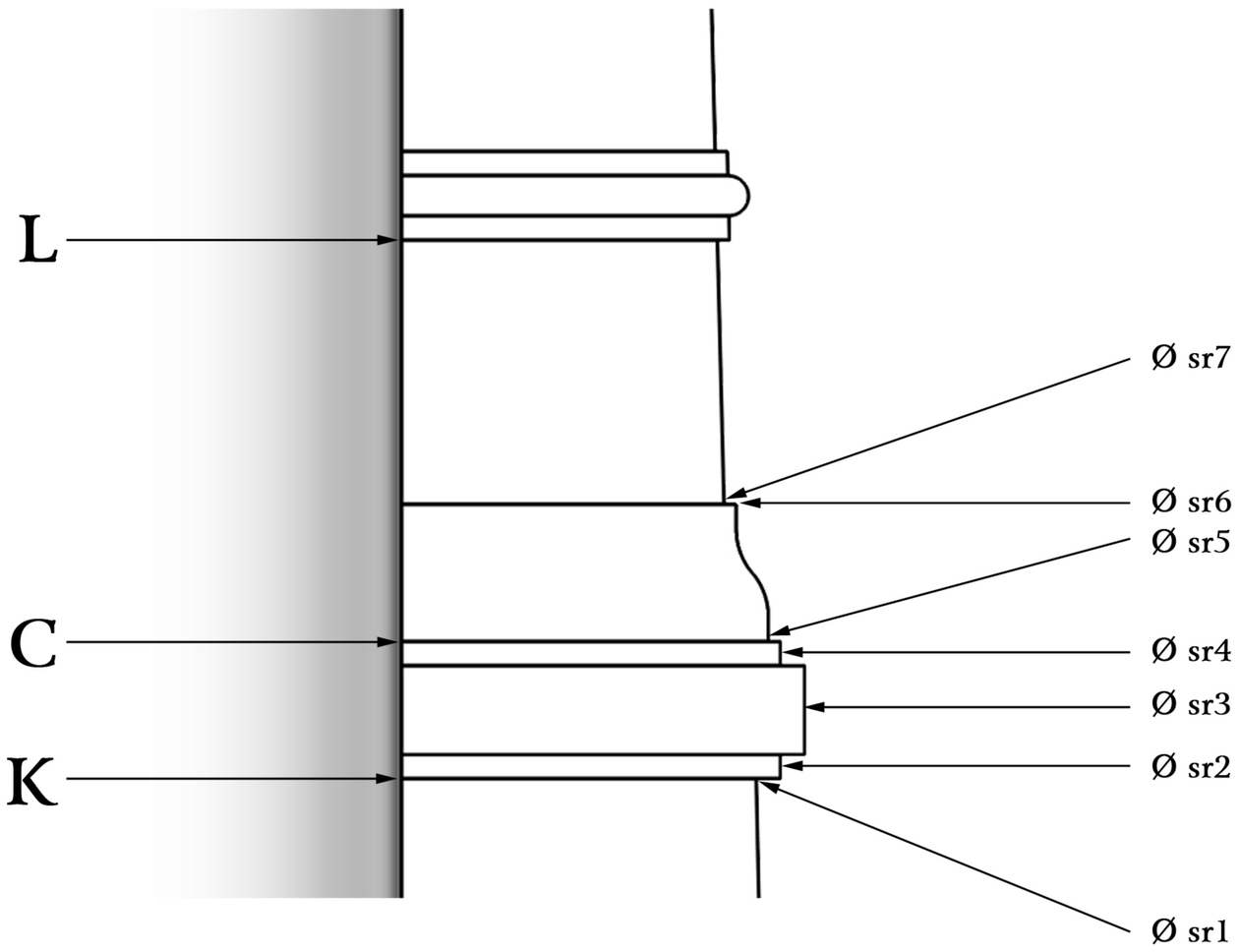

1st Reinforcering

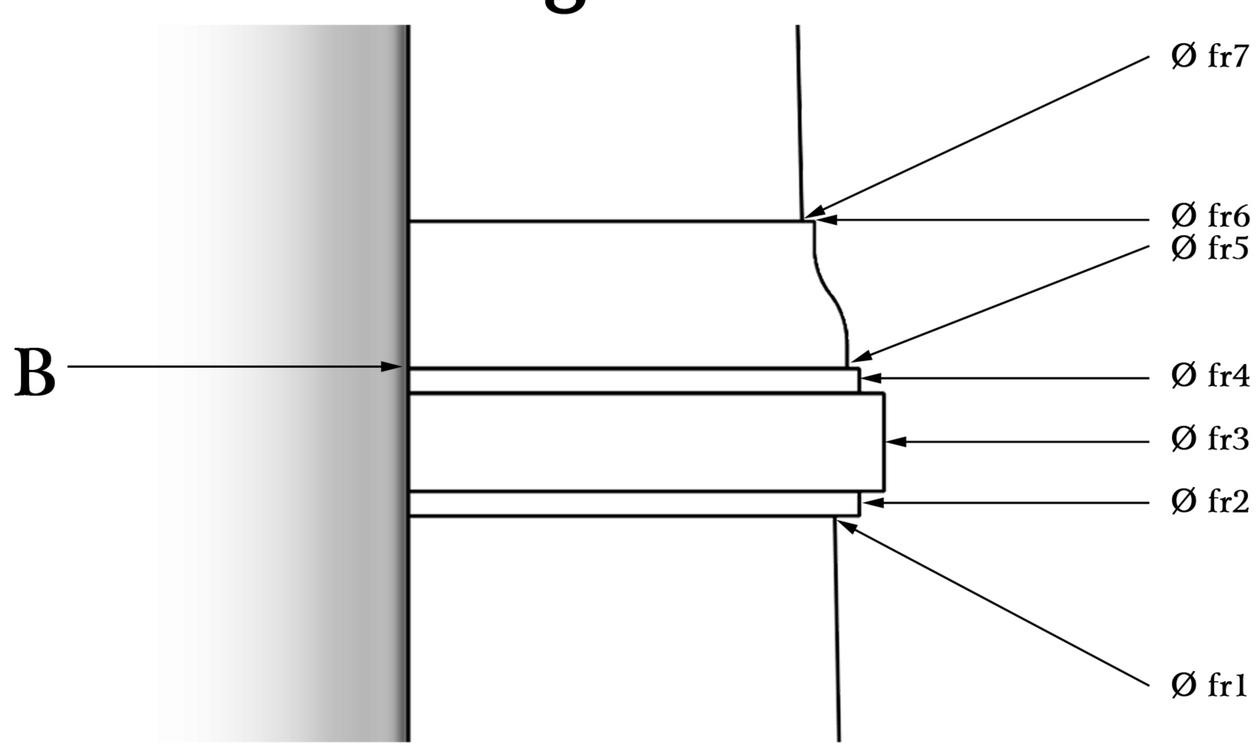

Ventring

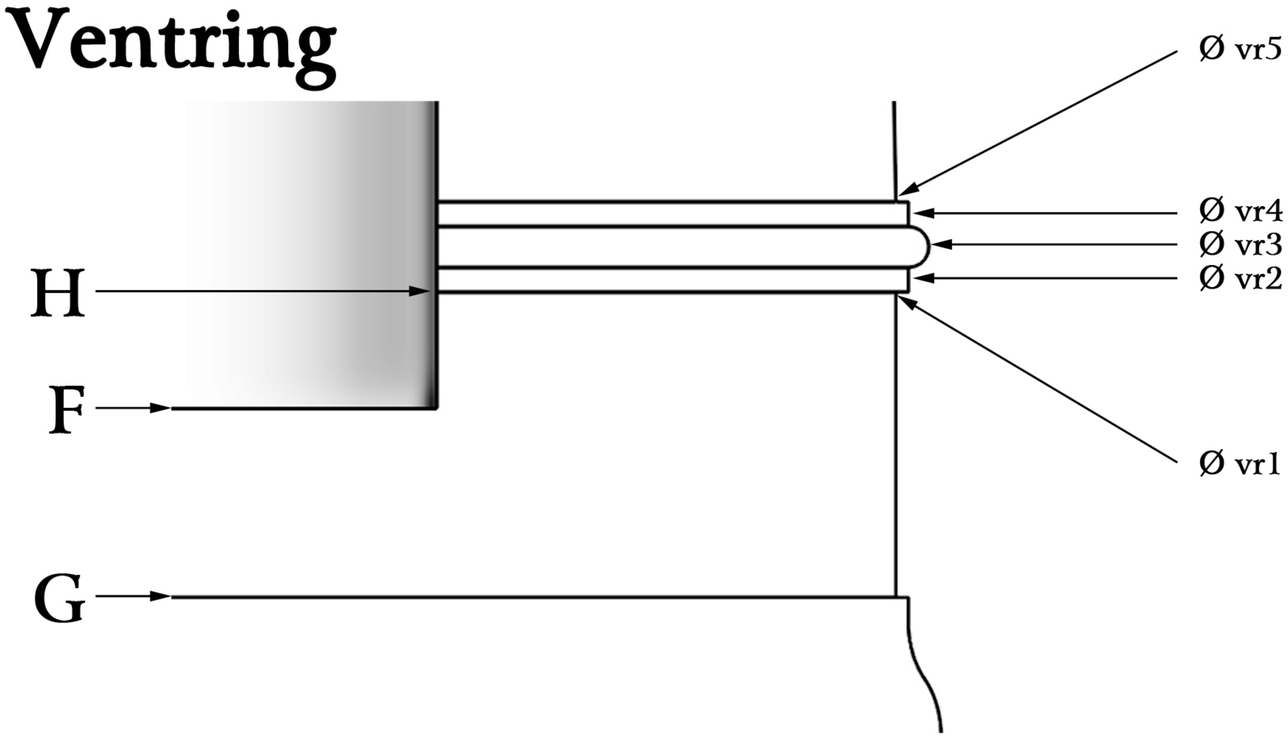

[Ø sr1]= _____

[Ø sr2]= _____

[Ø sr3]= _____

[Ø sr4]= _____

[Ø sr5]= _____

[Ø sr6]= _____

[Ø sr7]= _____

[Ø fr1]= _____

[Ø fr2]= _____

[Ø fr3]= _____

[Ø fr4]= _____

[Ø fr5]= _____

[Ø fr6]= _____

[Ø fr7]= _____

[Ø vr1]= _____

[Ø vr2]= _____

[Ø vr3]= _____

[Ø vr4]= _____

[Ø vr5]= _____

© Roman Domel
roman.domel@mail.de
Scientific elaboration by Roman Domel (Registered Support Accociation Moated Castle Oberau),
with the support of Mr. Charles Trollope, Mr. Nico Brinck, Mr. Dr. Heiko Berger (Military History Museum of the Bundeswehr Dresden)